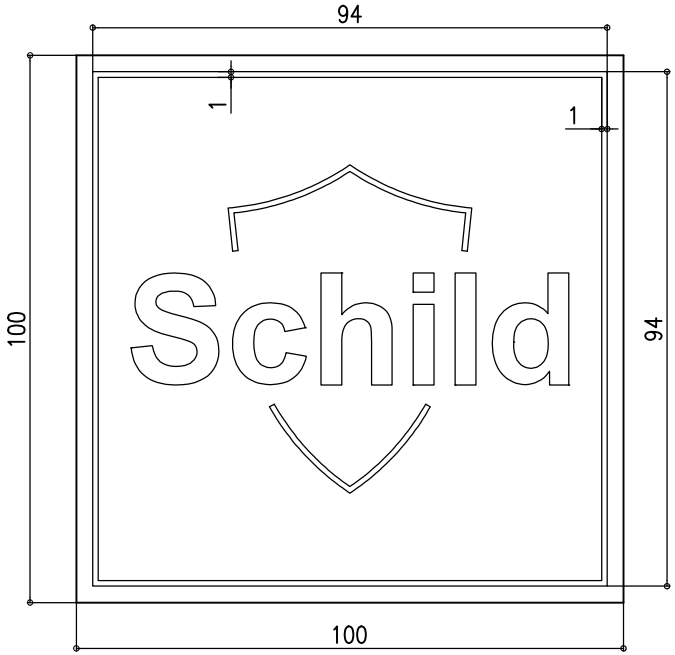

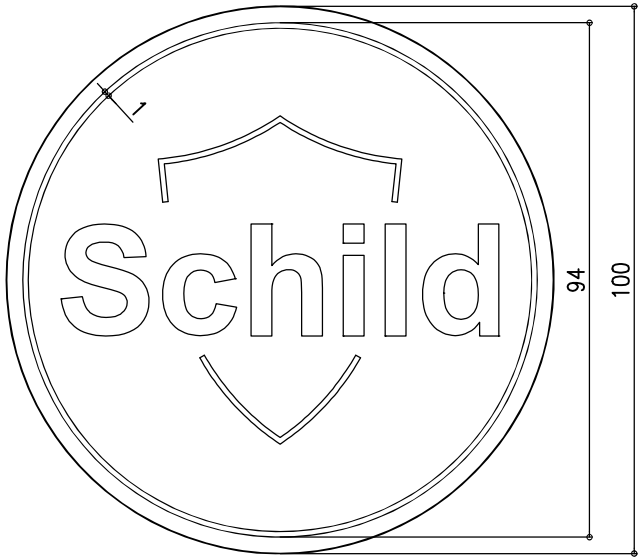

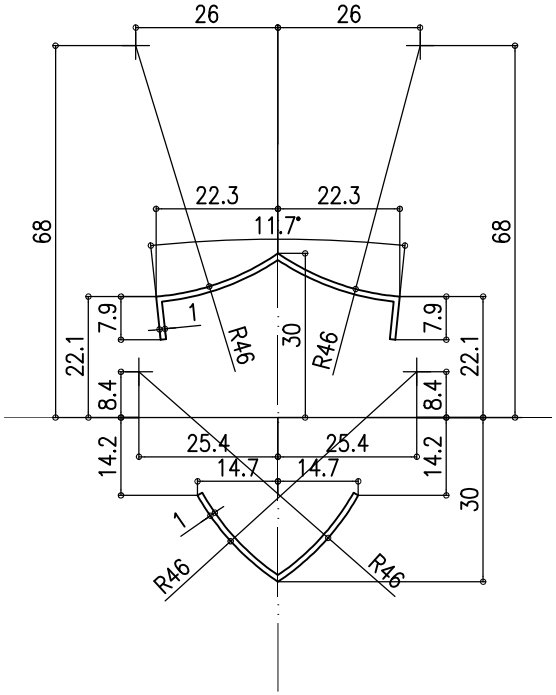

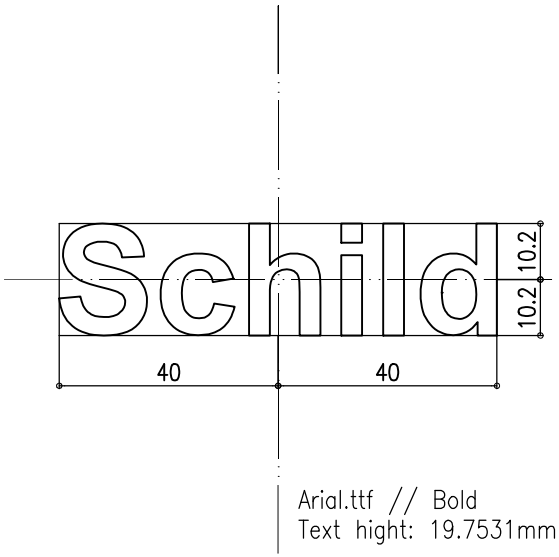

Arial.ttf // Bold
Text hight: 19.7531mm